TABLE OF CONTENTS

Copyright © 1997- Norsk EDIPRO

1 INTRODUCTION

When using EDI in the transport business a number of UNSMs are available, such as the six basic IFTM*xx* messages, the status report message IFTSTA, and IFCSUM for consolidated purposes. Several user groups have produced their own guidelines for implementation of these messages. As these guidelines are not fully consistent, the benefit of an agreed global standard may become set aside. In many organisations in Europe there has been an increasing awareness of the need to try to come to a harmonisation of the use of EDIFACT messages, and especially in the transport business.

In the Nordic countries national guidelines have been produced in the past years, most of them based upon directories from 1990 and 1991 (90.2 and 91.1). When need arose for a new version based upon S.93, a Nordic project was initiated in April 1993 in order to create a joint guideline. First part of this work is now finished and this Norwegian IFTMIN-subset is based upon the results from the Nordic project.

The scope of this message is intentionally kept very generic in order to be usable in business processes in different branches and countries, but as this message has been developed mainly for road transport purposes only, it may not be suitable for all modes of transport.

The Instruction Message is a message from the party issuing an instruction regarding forwarding/transport services for a consignment under conditions agreed, to the party arranging the forwarding and/or transport services.

1.1 Participating organisations

The following organisations have been involved in the process of making this national sub-set Implementation Guideline:

- Linjegods A/S
- NSB
- Posten
- Scansped A/S
- Tollpost-Globe A/S

1.2 Maintenance

Norsk EDIPRO is responsible for this documentation, and has thus all copyrights. For further information, requests for changes/additions, or questions related to the information found in this Implementation Guideline (IG), please contact:

Norsk EDIPRO Phone: +47 22 12 83 90
P.O.Box 2526 Solli Fax: +47 22 12 83 97
0202 OSLO

2 REFERENCES

This IG is based on the following documentation:

* *Message Implementation Guideline IFTMIN*
Based on catalogue S.93A

Copyright © 1997- Norsk EDIPRO

* *Nordic Implementation Guideline*
  Based on UNSM IFTMIN

* *Identifikasjon av parter, adresser, avdelinger, m.m. i EDIFACT-meldinger.*
  Version 1.0, September 1994.

* *ISO 9735, version 2, 1990.11.01*
  The UN/EDIFACT standard

* N*orsk veiledning i bruk av EDIFACT*
  Version 2.0, November 1991

* *UN/EDIFACT Standard Directory S.93A*

3 QUALITY CONTROL

This document has been subject to a hearing at the participating organisations, as well as other users with the necessary EDIFACT knowledge. Requested changes/additions have been incorporated into this document, which has the following status:

Implementation Guideline - For implementation

4 USAGE OF IFTMIN

This document provides the definition of the Instruction Message (Forwarder's Instruction) to be used in fulfilling the requirements of trading partners in the transport chain world-wide, in the interchange of cargo and transport related information using Electronic Data Interchange.

This message is a single consignment based message, being aligned with other single consignment based messages such as the booking messages (IFTMBP, IFTMBF and IFTMBC), the Instruction Contract Status Message (IFTMCS) and the Arrival Notice Message (IFTMAN). Although this message can be used for national as well as inter- national transport, be aware that the scope of this message covers road transport only, and may not be suitable for other modes of transport, such as railway, air, maritime.

4.1 Party identification

Parties are identified by codes used in the NAD segment (DE C082/3039). Codes for identifying parties can be drawn from different code lists, identified by the use of DE C082/1131 and DE C082/3055 in the NAD-segment. The following table lists the different options on how to identify parties (examples only in DE C082/3039).

DE C082/3039	DE C082/3055	Comments
912345678	82	Organization number in Enhetsregisteret ved Bronnoysundregisterne
7080000083077	9	EAN Location number
(id)	87	Assigned by carrier
(id)	91	Assigned by seller or seller's agent
NO123001	173	NODI number, assigned by Norsk EDIPRO

Copyright © 1997- Norsk EDIPRO

5 NOTATION

This chapter describes how the message description is outlined, e.g. how a segment is described. The message description follows the guidance found in *Norsk veiledning i bruk av EDIFACT*, version 2.0 (part 6).

5.1 Identification and description of segment groups

Most of the information in an EDIFACT-message is organised in segment groups, which can hold several segments forming a certain type of message or information. Segment groups can also be part of other segment groups. The following table is used to identify segment groups:

GROUP <*GROUP NUMBER*> - <*GROUP NAME*> (*CLASSIFICATION*)
Function:
Usage:
Segments used in this group:

Explanation:

Group Number, Group Name and Classification list the number of the group, the name of the group (optional), and its classification. If the group is part of another group or several other groups, those groups will be listed in the upper right corner of the table.

Function
The function definition as it is according to the EDIFACT-standard.

Usage
Any comments or additional information regarding the usage of the group will be listed here.

Segments used in this group
Lists all segments for this group, based on the Nordic Implementation Guideline. Segments that are used in this IG (as well as in the Nordic IG) are listed with the bold attribute, and those not used in this IG (but used in the Nordic IG) are listed using normal type face. A copy of the notation used in the Nordic IG is listed under the column "NORD.IG", and the notation used in this IG is listed under the column "This IG".

Copyright © 1997- Norsk EDIPRO

5.2 Identification and definition of segments

In this IG segments, simple data elements, composite data elements, and code values are defined using the following table:

***<Segment Id> - <Segment Name>* (*<Classification>*)**		*<Group Number>*
Function:		
EDIFACT Segment Definition	**Cl**	**Specification**
Usage:		
Example:		

Explanation:

Segment Id
This is how the segments are identified, with the classification in parenthesis. If the segment is part of a segment group, this will be listed in the cell named "Group Number".

Function
The function as it is defined according to the UN/EDIFACT standard.

EDIFACT Segment Definition
This item holds a complete copy of the segment information found in UN/EDIFACT Directory S.93A.

Cl
This item holds the coded requirement designator for each data element in a segment, based on this IG's usage. See chapter 5.3 for more information.

Specification
This item will list all valid code values along with a descriptions for each of those values. The listed codes represent, unless otherwise specified, the code values available for use in this data element. If no code value is listed, any of the code values listed in the EDIFACT standard can be used. In some cases there is a need to define when and how code values and data elements are to be used, and information about this can then be found under "Usage" when this applies (indicated by a number (①) next to the code value).

Usage
More in-depth information on how and when to use the segment, data elements and code values.

Example
Example(s) on how to use the segment.

Copyright © 1997- Norsk EDIPRO

5.3 Classification

Classification is a way of indicating if a segment, segment group, data element, or composite date element must be included in the message (classified as M), if it can
be omitted (Classified as C), or if it is not used (classified as -).

"M" - Mandatory segment/element
"C" - Conditional segment/element
"-" - Part of the UN/EDIFACT standard, but not used in this IG

Note that a mandatory component data element in a conditional composite data element must appear when the composite data element is used.

For segments and group segments the classification id is listed in parentheses next to the name of the segment or group. In addition, next to the classification id a number indicates the maximum number of times a group or segment can be repeated, using the following guidelines:

M1 - The group or segment must be included once, and once only
C1 - The group or segment can be included once, and if included, once only
M*x* - The group or segment must be included once, and can be included up to a total of x times
C*x* - The group or segment can be included once, and up to a total of x times

In the left part of the table (named "EDIFACT Segment Definition"), a complete listing of the UN/EDIFACT standard for that segment can be found. The letter used in the column named "Cl" will indicate whether each data element is mandatory ("M"), conditional ("C"), or not used in this Implementation Guideline ("-"). If a data segment is not used, the associated information is printed using the strikeout attribute (~~like this~~).

Data element naming convention:

- Name of COMPOSITE DATA ELEMENT in capital letters
- Name of DATA ELEMENT in capital letters
- Name of Component data element in small letters

Simple data element type:

Representation	**Data value representation**
an	alpha-numeric characters
a3	3 alphabetic characters, fixed length
n3	3 numeric characters, fixed length
an3	3 alpha-numeric characters, fixed length
a..3	up to 3 alphabetic characters
n..3	up to 3 numeric characters
an..3	up to 3 alpha-numeric characters

Copyright © 1997- Norsk EDIPRO

6 Branching Table and Diagrams

The branching table and diagrams outlined over the next pages list all segments and groups used in this national IG.

The *branching table* lists *all* segments and groups found in the EDIFACT-standard of IFTMIN with the notation listed under column 'EDIFACT'. An 'X' under either the 'Nord' or 'This' column indicates that the segment/group is used in the Nordic IG and/or in this IG, respectively. A '-' indicates that the segment/group is not been used. Segments/groups used in this IG are listed using the **bold** attribute.

The *branching diagrams* list *all* segments and groups according to the Nordic IG, with segments and groups *not* used in this IG - but used in the Nordic IG - displayed as greyed boxes.

Copyright © 1997- Norsk EDIPRO

6.1 Branching Table

			EDIFACT	Nord	This
UNH	**Message header**	**M**	**1**	**X**	**X**
BGM	**Beginning of message**	**M**	**1**	**X**	**X**
CTA	Contact information	C	1	-	-
COM	Communication contact	C	9	-	-
DTM	**Date/time/period**	**C**	**9**	**X**	**X**
TSR	**Transport service requirements**	**C**	**9**	**X**	**X**
CUX	Currencies	C	9	-	-
MOA	**Monetary amount**	**C**	**99**	**X**	**X**
FTX	**Free text**	**C**	**99**	**X**	**X**
CNT	**Control total**	**C**	**9**	**X**	**X**
	Segment Group 1	C	99	-	-
LOC	Place/location identification	M	1	-	-
DTM	Date/time/period	C	9	-	-
	Segment Group 2	**C**	**1**	**X**	**X**
TOD	**Terms of delivery**	**M**	**1**	**X**	**X**
LOC	**Place/location identification**	**C**	**9**	**X**	**X**
	Segment Group 3	**C**	**99**	**X**	**X**
RFF	**Reference**	**M**	**1**	**X**	**X**
DTM	Date/time/period	C	9	X	-
	Segment Group 4	C	9	-	-
GOR	Governmental requirements	M	1	-	-
	Segment Group 5	C	9	-	-
DOC	Document/message details	M	1	-	-
DTM	Date/time/period	C	1	-	-
	Segment Group 6	**C**	**9**	**X**	**-**
CPI	**Charge payment instructions**	**M**	**1**	**X**	**-**
CUX	Currencies	C	1	-	-
LOC	Place/location identification	C	9	-	-
MOA	Monetary amount	C	9	-	-
	Segment Group 7	C	99	X	-
TCC	Transport charge/rate calculations	M	1	X	-
LOC	Place/location identification	C	1	X	-
FTX	Free text	C	1	-	-
CUX	Currencies	C	1	-	-
PRI	Price details	C	1	-	-
EQN	Number of units	C	1	-	-
PCD	Percentage details	C	1	X	-
MOA	Monetary amount	C	9	X	-
QTY	Quantity	C	9	-	-
	Segment Group 8	**M**	**99**	**X**	**X**
TDT	**Details of transport**	**M**	**1**	**X**	**X**
DTM	Date/time/period	C	9	X	-
TSR	Transport service requirements	C	9	-	-
LOC	**Place/location identification**	**C**	**99**	**X**	**X**
	Segment Group 9	C	9	-	-
RFF	Reference	M	1	-	-
DTM	Date/time/period	C	1	-	-
	Segment Group 10	**M**	**99**	**X**	**X**
NAD	**Name and address**	**M**	**1**	**X**	**X**
LOC	Place/location identification	C	9	-	-
MOA	Monetary amount	C	9	-	-
	Segment Group 11	**C**	**9**	**X**	**X**
CTA	**Contact information**	**M**	**1**	**X**	**X**
COM	**Communication contact**	**C**	**9**	**X**	**X**
	Segment Group 12	**C**	**9**	**X**	**X**
DOC	**Document/message details**	**M**	**1**	**X**	**X**
DTM	**Date/time/period**	**C**	**1**	**X**	**X**

Copyright © 1997- Norsk EDIPRO

	Segment Group 13	C	99	X	-	
TCC	Transport charge/rate calculations	M	1	X	-	
PRI	Price details	C	1	-	-	
EQN	Number of units	C	1	-	-	
PCD	Percentage details	C	1	X	-	
MOA	Monetary amount	C	9	X	-	
QTY	Quantity	C	9	-	-	
	Segment Group 14	**C**	**9**	**X**	**X**	
RFF	**Reference**	**M**	**1**	**X**	**X**	
DTM	Date/time/period	C	9	-	-	
	Segment Group 15	C	9	-	-	
CPI	Charge payment instructions	M	1	-	-	
CUX	Currencies	C	1	-	-	
LOC	Place/location identification	C	9	-	-	
MOA	Monetary amount	C	9	-	-	
	Segment Group 16	**C**	**999**	**X**	**X**	
GID	**Goods item details**	**M**	**1**	**X**	**X**	
HAN	Handling instructions	C	1	X	-	
TMP	**Temperature**	**C**	**1**	**X**	**X**	
RNG	**Range details**	**C**	**1**	**X**	**X**	
TMD	Transport movement details	C	1	-	-	
LOC	Place/location identification	C	9	X	-	
MOA	Monetary amount	C	9	X	-	
PIA	**Additional product id**	**C**	**9**	**X**	**X**	
FTX	**Free text**	**C**	**9**	**X**	**X**	
	Segment Group 17	C	9	X	-	
NAD	Name and address	M	1	X	-	
DTM	Date/time/period	C	1	X	-	
	Segment Group 18	C	9	-	-	
GDS	Nature of cargo	M	1	-	-	
FTX	Free text	C	1	-	-	
	Segment Group 19	**C**	**99**	**X**	**X**	
MEA	**Measurements**	**M**	**1**	**X**	**X**	
EQN	Number of units	C	1	X	-	
	Segment Group 20	**C**	**99**	**X**	**X**	
DIM	**Dimensions**	**M**	**1**	**X**	**X**	
EQN	Number of units	C	1	X	-	
	Segment Group 21	C	9	X	-	
RFF	Reference	M	1	X	-	
DTM	Date/time/period	C	9	X	-	
	Segment Group 22	**C**	**9**	**X**	**X**	
PCI	**Package identification**	**M**	**1**	**X**	**X**	
RFF	Reference	C	1	-	-	
DTM	Date/time/period	C	1	-	-	
	Segment Group 23	C	9	-	-	
DOC	Document/message details	M	1	-	-	
DTM	Date/time/period	C	9	-	-	
	Segment Group 24	C	9	-	-	
TPL	Transport placement	M	1	-	-	
	Segment Group 25	C	9	-	-	
MEA	Measurements	M	1	-	-	
EQN	Number of units	C	1	-	-	
	Segment Group 26	**C**	**999**	**X**	**X**	
SGP	**Split goods placement**	**M**	**1**	**X**	**X**	
	Segment Group 27	C	9	-	-	
MEA	Measurements	M	1	-	-	
EQN	Number of units	C	1	-	-	

Copyright © 1997- Norsk EDIPRO

	Segment Group 28	C	99	X	-	
TCC	Transport charge/rate calculations	M	1	X	-	
PRI	Price details	C	1	-	-	
EQN	Number of units	C	1	-	-	
PCD	Percentage details	C	1	X	-	
MOA	Monetary amount	C	9	X	-	
QTY	Quantity	C	9	X	-	
LOC	Place/location identification	C	9	-	-	
	Segment Group 29	**C**	**9**	**X**	**X**	
DGS	**Dangerous goods**	**M**	**1**	**X**	**X**	
FTX	**Free text**	**C**	**99**	**X**	**X**	
	Segment Group 30	C	9	X	-	
CTA	Contact information	M	1	X	-	
COM	Communication contact	C	9	X	-	
	Segment Group 31	**C**	**9**	**X**	**X**	
MEA	**Measurements**	**M**	**1**	**X**	**X**	
EQN	Number of units	C	1	X	-	
	Segment Group 32	C	999	X	-	
SGP	Split goods placement	M	1	X	-	
	Segment Group 33	C	9	-	-	
MEA	Measurements	M	1	-	-	
EQN	Number of units	C	1	-	-	
	Segment Group 34	**C**	**999**	**X**	**X**	
EQD	**Equipment details**	**M**	**1**	**X**	**X**	
EQN	**Number of units**	**C**	**1**	**X**	**X**	
TMD	Transport movement details	C	1	X	-	
MEA	Measurements	C	9	X	-	
DIM	Dimensions	C	9	X	-	
SEL	**Seal number**	**C**	**99**	**X**	**X**	
TPL	Transport placement	C	9	-	-	
FTX	Free text	C	9	X	-	
	Segment Group 35	C	99	-	-	
TCC	Transport charge/rate calculations	M	1	-	-	
PRI	Price details	C	1	-	-	
EQN	Number of units	C	1	-	-	
PCD	Percentage details	C	1	-	-	
MOA	Monetary amount	C	9	-	-	
QTY	Quantity	C	9	-	-	
	Segment Group 36	C	9	X	-	
NAD	Name and address	M	1	X	-	
DTM	Date/time/period	C	1	-	-	
	Segment Group 37	C	99	X	-	
EQA	Attached equipment	M	1	X	-	
EQN	Number of units	C	1	X	-	
UNT	**Message trailer**	**M**	**1**	**X**	**X**	

Copyright © 1997- Norsk EDIPRO

6.2 Branching Diagrams

Branching Diagram 1

Segment group 6 and the segment CPI in this group is in use, therefore the illustration is not quite correct. The boxes for the segment group and the segment should be white, and not gray.

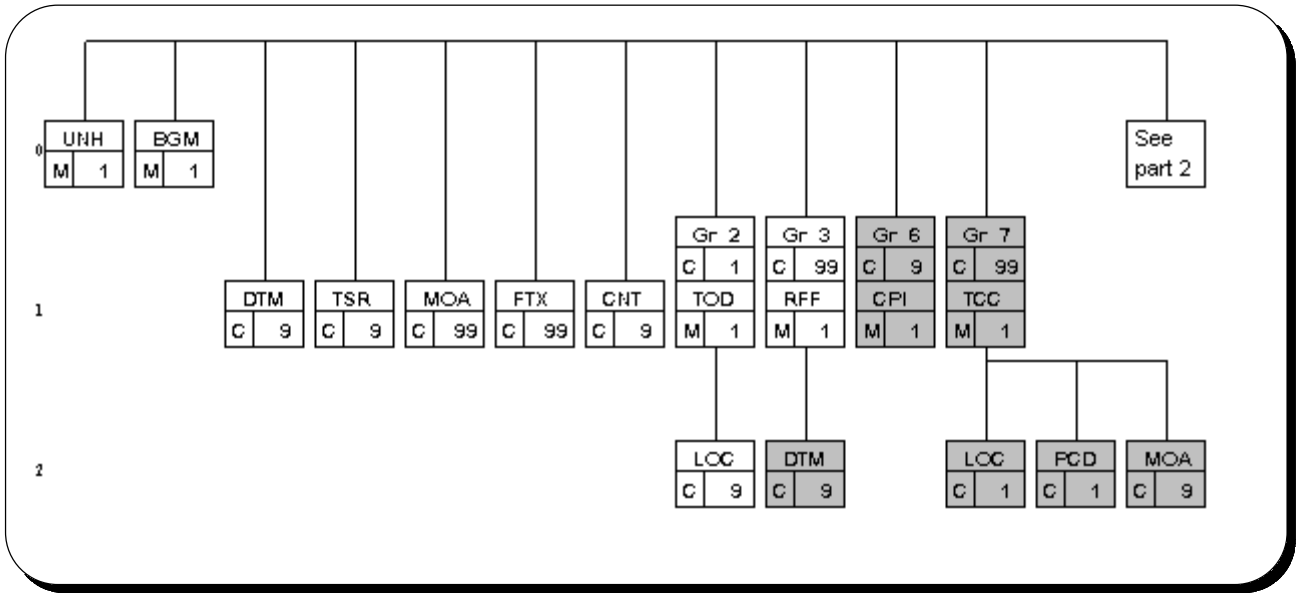

Branching Diagram 2

Segment group 13 and the segment TCC in this group is not in use, therefore the illustration is not quite correct. The boxes for the segment group and the segment should be gray, and not white.

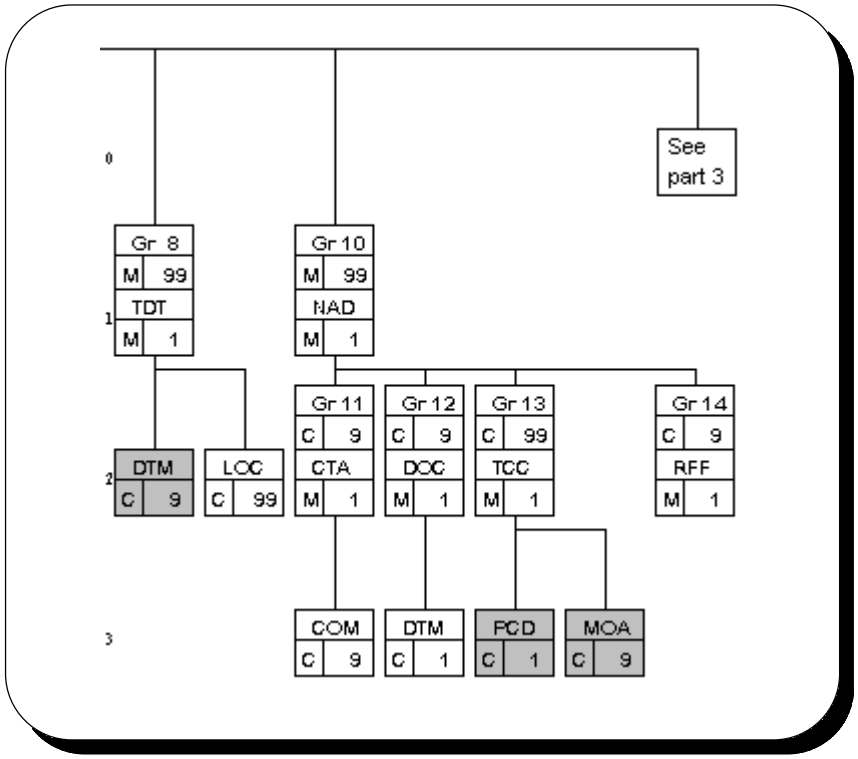

Copyright © 1997- Norsk EDIPRO

Branching Diagram 3

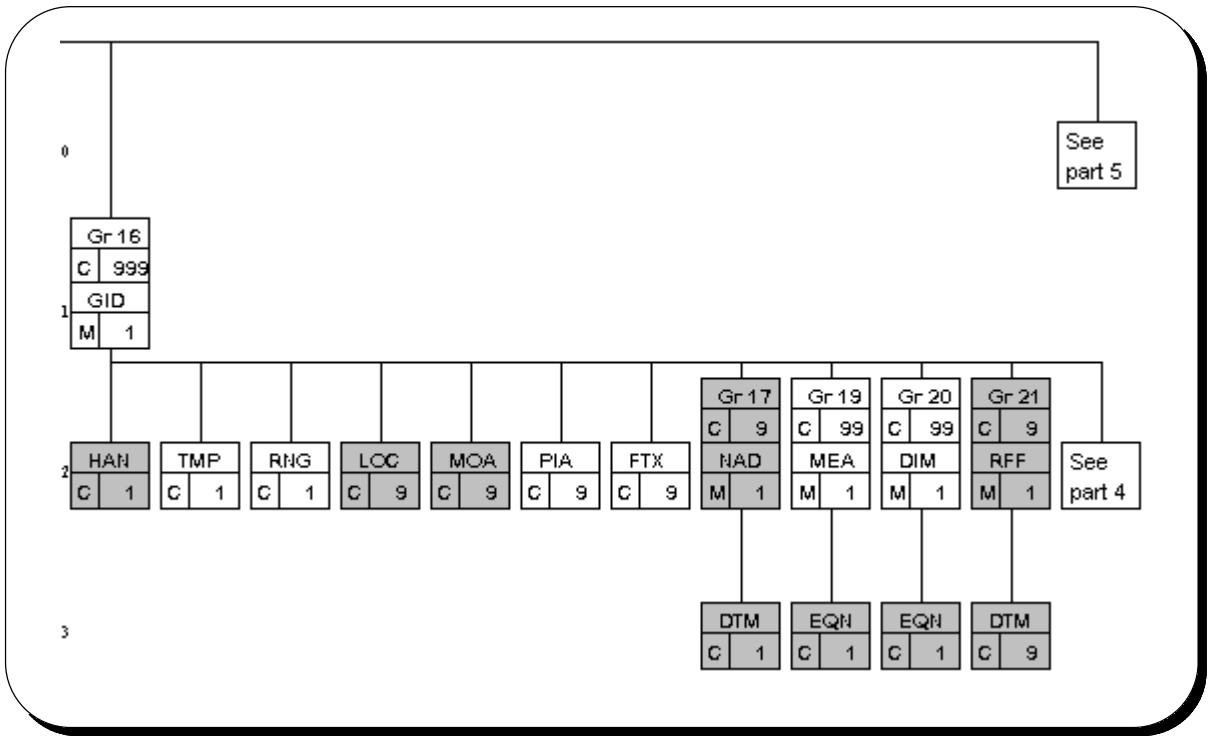

Branching Diagram 4

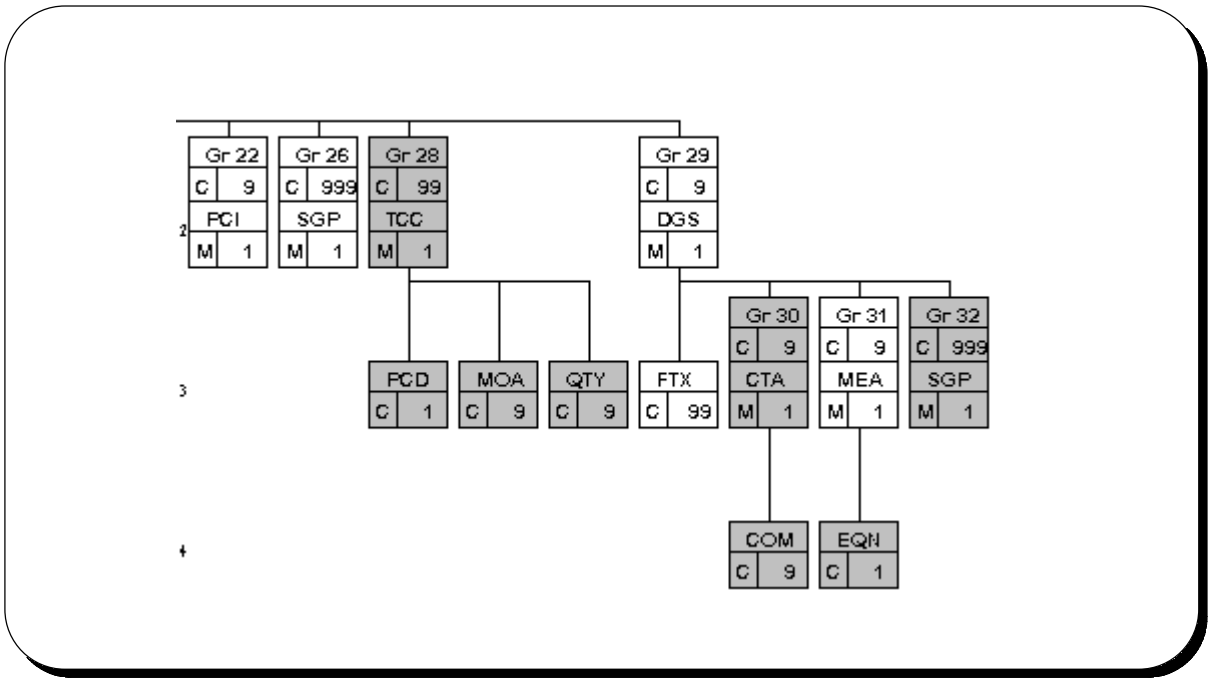

Copyright © 1997- Norsk EDIPRO

Branching Diagram 5

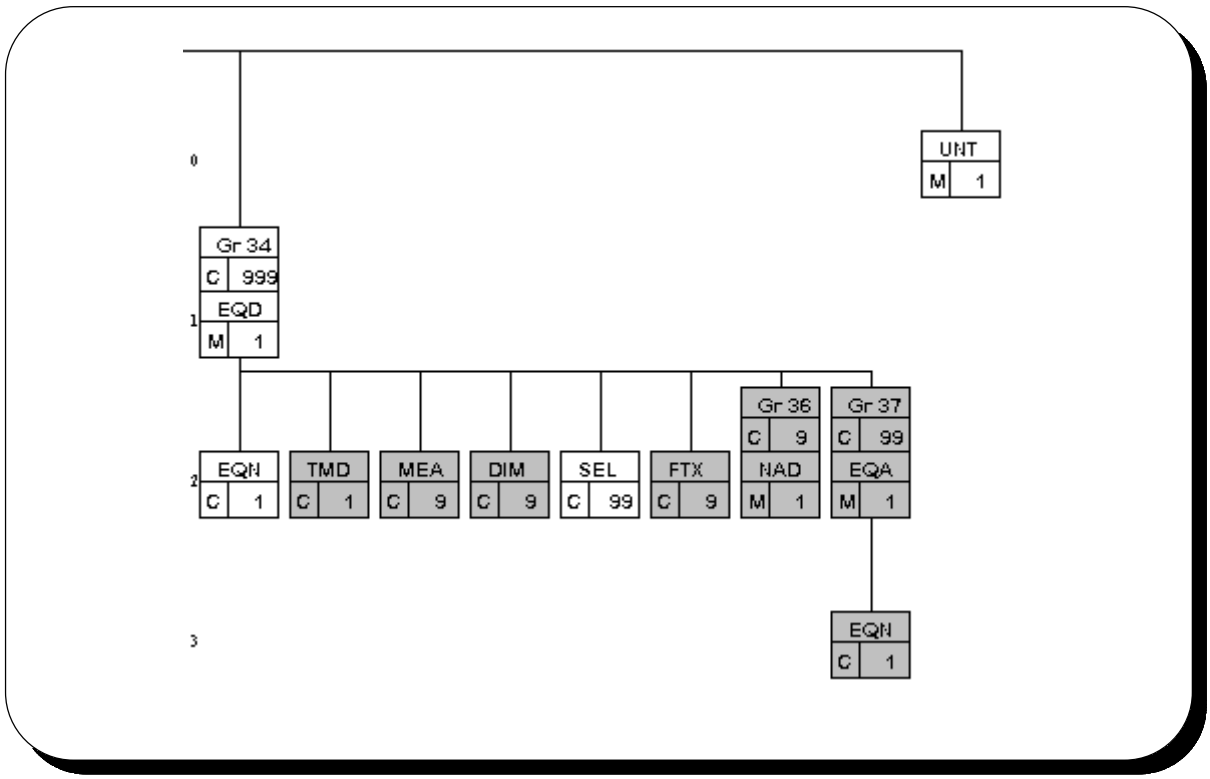

Copyright © 1997- Norsk EDIPRO

7 DEFINITION OF SEGMENTS AND SEGMENT GROUPS

This chapter contains information about all the segments used, with each segment's function, which data elements to use, the available code values, usage of the segment/group, and examples.

7.1 How to use the message for bulk consignments

The IFTMIN message can be used to give information about international and domestic bulk consignments and related subconsignments. Bulk consignment is indicated by using segment TSR, dataelement 4065 (composite C536) with codevalue ZSP.

Subconsignment is indicated by using segment BGM, dataelement 1001 (composite C002) with codevalue 610.

Subconsignment is related to bulk consignment by putting the bulk consignment document number in segment BGM, dataelement 1004, in the subconsignment reference in segment RFF (segment group #3), dataelement 1153 (composite C506) with codevalue BT.

Copyright © 1997- Norsk EDIPRO

UNH - MESSAGE HEADER (M1)

Function:
A service segment starting and uniquely identifying the message.

EDIFACT Segment Definition				Cl	Specification	
0062	MESSAGE REFERENCE NUMBER	an..14	M	M		
S009	MESSAGE IDENTIFIER		M	M		
0065	Message type identifier	an..6	M	M	IFTMIN	Instruction message
0052	Message type version number	an..3	M	M	S	Status 2 message
0054	Message type release number	an..3	M	M	93A	
0051	CONTROLLING AGENCY	an..2	M	M	UN	UN/ECE/TRADE/WP.4, United Nations Standard Messages (UNSM)
0057	ASSOCIATION ASSIGNED CODE	an..6	C	C	NOSM12~~1~~	Norsk EDIPRO Standard Message Handbook, version 1.2~~1~~
~~0068~~	~~COMMON ACCESS REFERENCE~~	~~an..35~~	~~C~~	-	Not used	
~~S010~~	~~STATUS OF THE TRANSFER~~		~~C~~	-	Not used	
~~0070~~	~~Sequence message transfer number~~	~~n..2~~	~~M~~	-	Not used	
~~0073~~	~~First/last sequence message transfer indication~~	~~a1~~	~~C~~	-	Not used	

Usage:

Example:
UNH+MSGID001+IFTMIN:S:93A+UN+NOSM12~~1~~'

BGM - BEGINNING OF MESSAGE (M1)

Function:
A segment to indicate the beginning of a message and to transmit identifying number and type of the message.

EDIFACT Segment Definition				Cl	Specification	
C002	DOCUMENT/MESSAGE NAME		C	C		
1001	Document/message name, coded	an..3	C	C	340①	Shipping instructions
					610②	Forwarding instructions
					700③	Waybill
~~1131~~	~~Code list qualifier~~	~~an..3~~	~~C~~	-	Not used	
~~3055~~	~~Code list responsible agency, coded~~	~~an..3~~	~~C~~	-	Not used	
~~1000~~	~~Document/message name~~	~~an..35~~	~~C~~	-	Not used	
1004	DOCUMENT/MESSAGE NUMBER	an..35	C	C	④	
1225	MESSAGE FUNCTION, CODED	an..3	C	C	1⑤	Cancellation
					5⑤	Replace
					9⑤	Original
~~4343~~	~~RESPONSE TYPE, CODED~~	~~an..3~~	~~C~~	-	Not used	

Usage:

C002/1001 ①340: International transport, incl. domestic stage
②610: Subconsignment
③700: Domestic transport

1004 ④Use of 1004 might differ among different transporters

1225 ⑤For codes 1 and 5 the 1004 value should be identical to the originally sent message. Code 9 is optional if it is not transmitted, the message is assumed to be the original one.

Example:
BGM+700+1'
BGM+610+2'

Copyright © 1997- Norsk EDIPRO

DTM - DATE/TIME/PERIOD (C9)

Function:
A segment to indicate a date and time applying to the whole message, e.g., date and time of document issue.

EDIFACT Segment Definition				Cl	Specification	
C507	DATE/TIME/PERIOD		M	M		
2005	Date/time/period qualifier	an..3	M	M	2	Delivery date/time, requested
					137①	Document/message date/time
					143②	Acceptance date/time of goods
2380	Date/time/period	an..35	C	C		
2379	Date/time/period format qualifier	an..3	C	C	101	YYMMDD
					102	CCYYMMDD
					201	YYMMDDHHMM
					203	CCYYMMDDHHMM
					20E	CCYYMMDDHHMM-CCYYMMDDHHMM (EAN-CODE)

Usage:
C507/2005 ② 137: Required when this segment is used
C507/2005 ①143: Date/time of transport (e.g. when the goods are shipped the day/evening prior to when the message is sent)
C507/2379 Format of period to be given in actual message without hyphen.

Example:
DTM+137:940503:101' - Message is issued on the 3rd of May 94.

Copyright © 1997- Norsk EDIPRO

TSR - TRANSPORT SERVICE REQUIREMENTS (C9)

Function:
A segment to identify the contract, conditions of carriage, services, and priority requirements for the transport.

EDIFACT Segment Definition				Cl	Specification	
C536	CONTRACT AND CARRIAGE CONDITION		C	C		
4065	Contract and carriage condition, coded	an..3	M	M	Examples:	
					7	Parcel service
					8	Normal tariff, full loading transport
					9	Ordinary
					12	Special tariff, parcels transport
					27	Door-to-door
					ZLE	Letter
					ZIN	Insurance - Contract should include insurance
					ZAD	Cash against documents - Documents must be presented to carrier before delivery
					ZNF①	Cash against documents - net freight
					ZGF①	Cash against documents - gross freight
					ZCD	Cash on delivery - Delivery party must pay at delivery time
					ZDD	Delivery against documents - "Cash against documents" without any specified amount in the MOA segment
					ZND	Goods not declared (="Tollpass") - The goods have not been declared by Customs
					ZSP	Bulk assignment
~~1131~~	~~Code list qualifier~~	~~an..3~~	~~C~~	-	Not used	
~~3055~~	~~Code list responsible agency, coded~~	~~an..3~~	~~C~~	-	Not used	
C233	SERVICE		C	C		
7273	Service requirement, coded	an..3	M	M	ZAS②	Request for advice services.
					ZCP③	Request for Customs Procedure
					ZPD④	Request for proof of delivery
~~1131~~	~~Code list qualifier~~	~~an..3~~	~~C~~	-	Not used	
~~3055~~	~~Code list responsible agency, coded~~	~~an..3~~	~~C~~	-	Not used	
~~7273~~	~~Service requirement, coded~~	~~an..3~~	~~C~~	-	Not used	
~~1131~~	~~Code list qualifier~~	~~an..3~~	~~C~~	-	Not used	
~~3055~~	~~Code list responsible agency, coded~~	~~an..3~~	~~C~~	-	Not used	
C537	TRANSPORT PRIORITY		C	C		
4219	Transport priority, coded	an..3	M	M	1	Express
					2	High speed
					3	Normal speed
					4⑤	Post service
~~1131~~	~~Code list qualifier~~	~~an..3~~	~~C~~	-	Not used	
~~3055~~	~~Code list responsible agency, coded~~	~~an..3~~	~~C~~	-	Not used	
C703	NATURE OF CARGO		C	C		
7085	Nature of cargo, coded	an..3	M	M	Examples - *CARGO*IMP-codes: see UNTDED*:	
					VOL	Volume
					REX	Explosives
					RMD	Dangerous cargo
					ZCO	Cold
					ZHO	Hot
					ZFR	Frozen
					ZPR	Package return
					ZSH	Special handling required - fragile
~~1131~~	~~Code list qualifier~~	~~an..3~~	~~C~~	-	Not used	
3055	Code list responsible agency, coded	an..3	C	C	*3*	*IATA*~~Not used~~

Usage:

General	Required dependencies for codes to be used in TSR, MOA, DOC and RFF are outlined in the table below.
C536/4065	①ZNF/ZGF: Codes correspond to the presently used GNF/GBF codes in the TOD segment of the NODI Domestic Waybill implementation guideline of the IFTMIN.
C233/7273	②ZAS: The party to be advised is identified in NAD/CN if no NAD/N2 is given. ③ZCP: The forwarder is asked to *perform customs clearance*~~advice about delivery~~ ④ZPD: The party to receive POD (Proof of delivery) is identified in NAD/CZ if no NAD/N1 is given.
C537/4219	⑤4: Transport under conditions specified by UPU (Universal Postal Union) and Rail organisations (parcels transport only).

Example:
TSR+9+ZPD++ZHO'

Copyright © 1997- Norsk EDIPRO

The following table explains the required dependencies between codes to be used in TSR, MOA, DOC (segment group 12) and RFF (segment group 3):

	TSR DE C536/4065	MOA DE C516/5025	DOC (grp 12) DE C002/1001	RFF (grp 3) DE C505/1153
Giro service	ZAD	50	383	SS
COD - bank, remittance	ZCD	22	383, ZBR	-
COD - international cheque	ZCD	22	ZCQ	-
COD - (tratte)	ZCD	22	ZTR	-
COD - paid through transport company	ZCD	22	-	-
Delivery against documents received by bank on payment	ZDD	-	706, 624, 763, etc.	-

MOA - MONETARY AMOUNT (C99)

Function:
A segment to indicate a monetary value for entire consignment, e.g. insured value, invoice amount, disbursements, etc.

EDIFACT Segment Definition				Cl	Specification	
C516	MONETARY AMOUNT		M	M		
5025	Monetary amount type qualifier	an..3	M	M	22①	Cash on delivery amount
					50①	Disbursements (Giro)
					77	Invoice amount
					157	Insurance value
5004	Monetary amount	n..18	C	C		
6345	Currency, coded	an..3	C	C	Examples:	
					NOK	Norwegian kroner
					DKK	Danish kroner
~~6343~~	~~Currency qualifier~~	~~an..3~~	~~C~~	-	Not used	
~~4405~~	~~Status, coded~~	~~an..3~~	~~C~~	-	Not used	

Usage:
C516/5025 ①See table at TSR segment for dependency information.

Example:
MOA+22:27500.5:DKK'

FTX - FREE TEXT (C99)

Function:
A segment to specify free form or processable supplementary information, such as status of transport, remarks to be printed on the transport documents (where required), consignment remarks, insurance instructions, etc., or any other additional information.

EDIFACT Segment Definition				Cl	Specification	
4451	TEXT SUBJECT QUALIFIER	an..3	M	M	ICN	Information for consignee
					SIC	Sender's instruction to carrier
~~4453~~	~~TEXT FUNCTION, CODED~~	~~an..3~~	~~C~~	-	Not used	
~~C107~~	~~TEXT REFERENCE~~	-	~~C~~	-	Not used	
~~4441~~	~~Free text, coded~~	~~an..3~~	~~M~~	-	Not used	
~~1131~~	~~Code list qualifier~~	~~an..3~~	~~C~~	-	Not used	
~~3055~~	~~Code list responsible agency, coded~~	~~an..3~~	~~C~~	-	Not used	
C108	TEXT LITERAL		C	C	①	
4440	Free text	an..70	M	M		
4440	Free text	an..70	C	C		
4440	Free text	an..70	C	C		
4440	Free text	an..70	C	C		
4440	Free text	an..70	C	C		
~~3453~~	~~LANGUAGE, CODED~~	~~an..3~~	~~C~~	-	Not used	

Usage:
C108 ①All five 4440 lines should be used before the segment is repeated.

Example:
FTX+SIC+++Høy lasterampe hos mottaker'

Copyright © 1997- Norsk EDIPRO

CNT - CONTROL TOTAL (C9)

Function:
A segment to specify totals for a consignment.

EDIFACT Segment Definition				Cl	Specification	
C270	CONTROL		M	M		
6069	Control qualifier	an..3	M	M	7	Total gross weight
					11	Total number of packages
					15	Total consignment, cube
					ZAR	Area
					ZLM	Total loading meters
					ZPL	Pallelag
					ZPP	Palleplasser
6066	Control value	n..18	M	M		
6411	Measure unit qualifier	an..3	C	C	DMK	Square decimetre
					DMQ	Cubic decimetre
					GRM	Gram
					KGM	Kilogram
					PCE	Pieces
					MTK	Square metre
					MTQ	Cubic metre
					MTR	Metre

Usage:

Example:
CNT+15:7.525:MTQ'

Copyright © 1997- Norsk EDIPRO

Group 2 (C1)

Function:
A group of segments to specify terms of delivery and related locations.

Usage:

Segments used in this group:

```
                                                    NORD.IG      This IG
-------- Segment Group  2 ------------------------- C     1      C     1 ----------+
  TOD    Terms of delivery                          M     1      M     1           |
  LOC    Place/location identification              C     9      C     9 ----------+
```

TOD - Terms of delivery (M1) — Group 2

Function:
A segment to specify the applicable terms of delivery.

EDIFACT Segment Definition				Cl	Specification
4055	TERMS OF DELIVERY FUNCTION, CODED	an..3	C	C	5 Transport condition
~~4215~~	~~TRANSPORT CHARGES METHOD OF PAYMENT, CODED~~	~~an..3~~	~~C~~	-	Not used
C100	TERMS OF DELIVERY		C	C	
4053	Terms of delivery, coded	an..3	C	C	①
1131	Code list qualifier	an..3	C	C	*182*~~ZCT~~ CombiTerms *1990*
~~3055~~	~~Code list responsible agency, coded~~	~~an..3~~	~~C~~	-	Not used
4052	Terms of delivery	an..70	C	-	
4052	Terms of delivery	an..70	C	-	

Usage:
To be used for international consignments only.~~General~~
~~Use, as required, the FTX segment for free text information with qualifier (4451) = 'TRA'~~
C100/4053 ①Default Incoterms 90, e.g. 001(paid by receiving part) and 023 (used for domestic transport)

Example:
TOD+5++001:*182*~~ZCT~~'

Copyright © 1997- Norsk EDIPRO

LOC - PLACE/LOCATION IDENTIFICATION (C9) Group 2

Function:
A segment to specify a location related to the terms of delivery.

EDIFACT Segment Definition				Cl	Specification	
3227	PLACE/LOCATION QUALIFIER	an..3	M	M	1	Place of terms of delivery
C517	LOCATION IDENTIFICATION		C	C		
3225	Place/location identification	an..25	C	C	①	
1131	Code list qualifier	an..3	C	C	16	Postcode directory
					162①	Country
~~3055~~	~~Code list responsible agency, coded~~	~~an..3~~	~~C~~	-	Not used	
3224	Place/location	an..17	C	C		
~~C519~~	~~RELATED LOCATION ONE IDENTIFICATION~~	-	~~C~~	-	Not used	
~~3223~~	~~Related place/location one identification~~	~~an..25~~	~~C~~	-	Not used	
~~1131~~	~~Code list qualifier~~	~~an..3~~	~~C~~	-	Not used	
~~3055~~	~~Code list responsible agency, coded~~	~~an..3~~	~~C~~	-	Not used	
~~3222~~	~~Related place/location one~~	~~an..70~~	~~C~~	-	Not used	
~~C553~~	~~RELATED LOCATION TWO IDENTIFICATION~~	-	~~C~~	-	Not used	
~~3233~~	~~Related place/location two identification~~	~~an..25~~	~~C~~	-	Not used	
~~1131~~	~~Code list qualifier~~	~~an..3~~	~~C~~	-	Not used	
~~3055~~	~~Code list responsible agency, coded~~	~~an..3~~	~~C~~	-	Not used	
~~3232~~	~~Related place/location two~~	~~an..70~~	~~C~~	-	Not used	
~~5479~~	~~RELATION, CODED~~	~~an..3~~	~~C~~	-	Not used	

Usage:

General Segment is to be used for international transport only.
If for a postal code both the country and the code itself has to be supplied, two repetitions of the segment should be used.

C517/3225 ① Use ISO 3166 alpha two-letter country code when 1131=162.

Example:

LOC+1+6300:16'
LOC+1+NO:162'

Copyright © 1997- Norsk EDIPRO

Group 3 (C99)

Function:
A group of segments containing a reference and constants which apply to the entire message.

Usage:

Segments used in this group:

```
                                                    NORD.IG      This IG
-------- Segment Group  3 ------------------------- C    99     C    99 ----------+
  RFF    Reference                                  M     1     M     1           |
  DTM    Date/time/period                           C     9     -     - ----------+
```

RFF - Reference (M1) — Group 3

Function:
A segment to express a reference which applies to the entire message such as: the document/message number that is to be updated by this very message (according to data element 1225 Message Function, Coded in segment BGM), booking reference, order number, insurance contract, etc.

EDIFACT Segment Definition				Cl	Specification	
C506	REFERENCE		M	M		
1153	Reference qualifier	an..3	M	M	*AAO*	*Consignee's shipment reference number*
					AAM	Waybill number
					ABT	Customs declaration number
					BN	Booking reference number
					BT①	Batch number/lot number
					CO	Buyers order number
					CT	Contract number
					CU②	Consignor's reference number
					FF③	Freight forwarder's reference number
					ICO	*Insurance contract reference number*
					SS④	Sellers reference number
					XC⑤	Cargo control number
1154	Reference number	an..35	C	C		
~~1156~~	~~Line number~~	~~an..6~~	~~C~~	-	Not used	
~~4000~~	~~Reference version number~~	~~an..35~~	~~C~~	-	Not used	

Usage:
C506/1153 ①BT: See chapter 7.1 (How to use the message for bulk consignments) for further information
②CU: To be used if it is not given in BGM/1004
③FF: Consignment reference number used in international transport leg.
④SS: KID (Customer Identification) reference when giro service is used - see table at TSR segment
⑤XC: Reference used to identify and control a carrier and consignment from initial entry into a country until release of the cargo by Customs.

Example:
RFF+BN:57745'

Copyright © 1997- Norsk EDIPRO

Group 6 (C9)

Function:
A group of segments to indicate charge methodology which applies to the entire message.

Usage:

Segments used in this group:

			NORD.IG		This IG	
	Segment Group 6	**C**	**9**	**X**	**-**	**+**
CPI	**Charge payment instructions**	**M**	**1**	**X**	**-**	**|**
CUX	Currencies	C	1	-	-	|
LOC	Place/location identification	C	9	-	-	|
MOA	Monetary amount	C	9	-	-	+

CPI - Charge Payment Instructions (M1) — Group 6

Function:
A segment to *identify a charge*.

EDIFACT Segment Definition				Cl	Specification	
C229	CHARGE CATEGORY		C	C		
5237	Charge category, coded	an..3	M	M	Eksamples:	
					1	All Charges
					2	Additional charges
					3	Transport charges
					4	Basic freight
					5	Destination haulage charges
					13	Specific amount payable
					15	All costs up to a specific location
~~1131~~	~~Code list qualifier~~	~~an..3~~	~~C~~	-		
~~3055~~	~~Code list responsible agency, coded~~	~~an..3~~	~~C~~	-		
~~C231~~	~~METHOD OF PAYMENT~~		~~C~~	-		
~~4215~~	~~Transport charges method of payment, coded~~	~~an..3~~	~~M~~	-		
~~1131~~	~~Code list qualifier~~	~~an..3~~	~~C~~	-		
~~3055~~	~~Code list responsible agency, coded~~	~~an..3~~	~~C~~	-		
4237	PREPAID/COLLECT INDICATOR, CODED	an..3	C	C	B	Third party to pay
					C	Collect
					P	Prepaid

Usage:
The CPI segment is to be used within domestic consignments and in international consignments when payer of domestic precarriage is different from party given in terms of delivery in TOD segment. Payer of domestic precarrige is often international forwarder which in these cases should be identified in NAD-segment with code "FW" in 3035.

Example:
CPI+1++P'

Copyright © 1997- Norsk EDIPRO

Group 8 (M99)

Function:
A group of segments to indicate details of the movement of goods such as mode and means of transport, locations, departure, and arrival date(s) and time(s).

Usage:

Segments used in this group:

		NORD.IG		This IG	
	Segment Group 8	**M**	**99**	**M**	**99**
TDT	**Details of transport**	**M**	**1**	**M**	**1**
DTM	Date/time/period	C	9	-	-
LOC	**Place/location identification**	**C**	**99**	**C**	**99**

TDT - DETAILS OF TRANSPORT (M1) — Group 8

Function:
A segment to indicate information related to a certain stage of the transport, such as mode, means and carrier.

EDIFACT Segment Definition				Cl	Specification	
8051	TRANSPORT STAGE QUALIFIER	an..3	M	M	10①	Pre-carriage transport
					20②	Main-carriage transport
8028	CONVEYANCE REFERENCE NUMBER	an..17	C	C		
C220	MODE OF TRANSPORT		C	C		
8067	Mode of transport, coded	an..3	C	C	2	Rail
					3	Road transport
~~8066~~	~~Mode of transport~~	~~an..17~~	~~C~~	-	Not used	
C228	TRANSPORT MEANS		C	C		
~~8179~~	~~Type of means of transport identification~~	~~an..8~~	~~C~~	-	Not used	
~~8178~~	~~Type of means of transport~~	~~an..17~~	~~C~~	-	Not used	
C040	CARRIER		C	C		
3127	Carrier identification	an..17	C	C		
1131	Code list qualifier	an..3	C	C		
3055	Code list responsible agency, coded	an..3	C	C	9	EAN (International Article Numbering association)
					82	Enhetsregisteret ved Bronnoysundregisterne, Norway
					87③	Assigned by carrier
3128	Carrier name	an..35	C	C		
~~8101~~	~~TRANSIT DIRECTION, CODED~~	~~an..3~~	~~C~~	-	Not used	
~~C401~~	~~EXCESS TRANSPORTATION INFORMATION~~	-	~~C~~	-	Not used	
~~8457~~	~~Excess transportation reason, coded~~	~~an..3~~	~~M~~	-	Not used	
~~8459~~	~~Excess transportation responsibility, coded~~	~~an..3~~	~~M~~	-	Not used	
~~7130~~	~~Customer authorization number~~	~~an..17~~	~~C~~	-	Not used	
C222	TRANSPORT IDENTIFICATION		C	C		
~~8213~~	~~Id of means of transport identification~~	~~an..9~~	~~C~~	-	Not used	
~~1131~~	~~Code list qualifier~~	~~an..3~~	~~C~~	-	Not used	
~~3055~~	~~Code list responsible agency, coded~~	~~an..3~~	~~C~~	-	Not used	
8212	Id of the means of transport	an..17	C	C		
8453	Nationality of means of transport, coded	an..3	C	C	④	

Usage:
8051 ①10: Only to be used if the shipper can identify the specific driver to perform the collection.
②20: Should always be given.
C040/3055 ③87: Used if 8051=10.
C222/8453 ④Use ISO 3166 two-letter country code

Example:
TDT+20++3++123456789::82'

Copyright © 1997- Norsk EDIPRO

LOC - PLACE/LOCATION IDENTIFICATION (C99) — Group 8

Function:
A segment to indicate a location such as origin, destination, stop off, etc. related to this leg of transport.

EDIFACT Segment Definition				Cl	Specification	
3227	PLACE/LOCATION QUALIFIER	an..3	M	M	5①	Place of departure (terminal)
					8	Place of destination (terminal)
					~~80~~	~~Place of despatch~~
					~~83~~	~~Place of delivery (by on carriage)~~
C517	LOCATION IDENTIFICATION		C	C		
3225	Place/location identification	an..25	C	C		
1131	Code list qualifier	an..3	C	C	16	Postcode directory
					162②	Country
3055	Code list responsible agency, coded	an..3	C	C	9	EAN (International Article Numbering association)
					ZZZ③	Mutually defined
3224	Place/location	an..17	C	C		
~~C519~~	~~RELATED LOCATION ONE IDENTIFICATION~~	-	~~C~~	-	Not used	
~~3223~~	~~Related place/location one identification~~	~~an..25~~	~~C~~	-	Not used	
~~1131~~	~~Code list qualifier~~	~~an..3~~	~~C~~	-	Not used	
~~3055~~	~~Code list responsible agency, coded~~	~~an..3~~	~~C~~	-	Not used	
~~3222~~	~~Related place/location one~~	~~an..70~~	~~C~~	-	Not used	
~~C553~~	~~RELATED LOCATION TWO IDENTIFICATION~~	-	~~C~~	-	Not used	
~~3233~~	~~Related place/location two identification~~	~~an..25~~	~~C~~	-	Not used	
~~1131~~	~~Code list qualifier~~	~~an..3~~	~~C~~	-	Not used	
~~3055~~	~~Code list responsible agency, coded~~	~~an..3~~	~~C~~	-	Not used	
~~3232~~	~~Related place/location two~~	~~an..70~~	~~C~~	-	Not used	
~~5479~~	~~RELATION, CODED~~	~~an..3~~	~~C~~	-	Not used	

Usage:

3227 ①5: Specifies the departure terminal from which the cost is based

C517/1131 ②162: Country code to be used for international transports only. In these cases two repetitions of the LOC segment is to be used

C517/3055 ③ZZZ: To be used when identifying places defined by forwarder.

Example:

LOC+5~~80~~+0516:16'

>>Skal NSB ha en kode for egne koder for stasjonsnumre og havner (4 sifret) i 1131?

Copyright © 1997- Norsk EDIPRO

Group 10 (M99)

Function:
A group of segments to identify a party, related references, locations contacts, required documents, and charges to be paid by the party.

Usage:

Segments used in this group:

		NORD.IG		This IG	
	Segment Group 10	**M**	**99**	**M**	**99**
NAD	**Name and address**	**M**	**1**	**M**	**1**
	Segment Group 11	**C**	**9**	**C**	**9**
CTA	**Contact information**	**M**	**1**	**M**	**1**
COM	**Communication contact**	**C**	**9**	**C**	**9**
	Segment Group 12	**C**	**9**	**C**	**9**
DOC	**Document/message details**	**M**	**1**	**M**	**1**
DTM	**Date/time/period**	**C**	**1**	**C**	**1**
	Segment Group 13	**-**	**-**	**C**	**99**
TCC	**Transport charge/rate calculations**	**-**	**-**	**M**	**1**
PCD	Percentage details	-	-	-	-
MOA	Monetary amount	-	-	-	-
	Segment Group 14	**C**	**9**	**C**	**9**
RFF	**Reference**	**M**	**1**	**M**	**1**

Copyright © 1997- Norsk EDIPRO

NAD - NAME AND ADDRESS (M1) — Group 10

Function:
A segment to identify the party's name, address, and function.

EDIFACT Segment Definition				Cl	Specification	
3035	PARTY QUALIFIER	an..3	M	M	BN①	Insurance beneficiary
					CH②	Connecting carrier
					CN③	Consignee
					CZ③	Consignor
					DP④	Delivery party
					FP	Freight/charges payer
					FW⑤	Freight forwarder
					N1⑥	Notify party no. 1
					N2⑦	Notify party no. 2
					PW⑧	Despatch party
					WH	Warehouse keeper
C082	PARTY IDENTIFICATION DETAILS		C	C		
3039	Party id identification	an..17	M	M		
1131	Code list qualifier	an..3	C	C		
3055	Code list responsible agency, coded	an..3	C	C	9	EAN (International Article Numbering association)
					82	Enhetsregisteret ved Bronnoysundregisterne, Norway
					87	Assigned by carrier
					91	Assigned by seller or seller's agent
C058	NAME AND ADDRESS		C	C		
3124	Name and address line	an..35	M	M		
3124	Name and address line	an..35	C	C		
3124	Name and address line	an..35	C	C		
3124	Name and address line	an..35	C	C		
3124	Name and address line	an..35	C	C		
C080	PARTY NAME		C	C		
3036	Party name	an..35	M	M		
3036	Party name	an..35	C	C		
3036	Party name	an..35	C	C		
3036	Party name	an..35	C	C		
3036	Party name	an..35	C	C		
3045	Party name format, coded	an..3	C	C		
C059	STREET		C	C		
3042	Street and number/p.o. box	an..35	M	M	Street address	
3042	Street and number/p.o. box	an..35	C	C	P.O. Box	
3042	Street and number/p.o. box	an..35	C	C		
3164	CITY NAME	an..35	C	C		
~~3229~~	~~COUNTRY SUB-ENTITY IDENTIFICATION~~	~~an..9~~	~~C~~	-	Not used	
3251	POSTCODE IDENTIFICATION	an..9	C	C	⑨	
3207	COUNTRY, CODED	an..3	C	C	⑩	

Usage:

General — We recommend the following usage:
A. If possible, use the coded id in data element 3039
B. If A is not possible, use the structured n&a information in C080/3207.
C. If A and B are not possible, use data element C058.

3035 — ①BN: Should always be included if the ZIN code is used i the TSR segment
②CH: Only to be used for the international bulk/subconsignment scenario in those cases where the shipper wants to instruct the use of a different transporter of his subconsignment in the receiving country
③CN and CZ: Must always be used
④DP: Delivery party, *to be used* if not identical to consignee*: CN*
⑤FW: To identify the forwarder to perform the international transport leg
⑥N1: Party to receive POD if different from CZ.
⑦N2: Party to be advised if different from CN.
⑧PW: Despatch party if not identical to consignor

3251 — ⑨Use ZIP-code for street address, or repeat segment twice

3207 — ⑩Use ISO 3166 alpha two-letter country code.

Example:
NAD+CZ+123456789::82'
NAD+CN+987654321::82'

Copyright © 1997- Norsk EDIPRO

Group 11 (C99) — Group 10

Function:
A group of segments identifying a contact and its communications related to the party.

Usage:

Segments used in this group:

```
                                                NORD.IG      This IG
-------- Segment Group 11 ------------------------ C     9     C     9 ----------+
  CTA    Contact information                       M     1     M     1           |
  COM    Communication contact                     C     9     C     9 ----------+
```

CTA - Contact information (M1) — Group 11, Group 10

Function:
A segment to identify a person or department within a party.

EDIFACT Segment Definition				Cl	Specification	
3139	CONTACT FUNCTION, CODED	an..3	C	C	IC	Information contact
C056	DEPARTMENT OR EMPLOYEE DETAILS		C	C		
3413	Department or employee identification	an..17	C	C		
3412	Department or employee	an..35	C	C		

Usage:
C056/3413 Coded identification like initials or other kinds of abbreviations.

Example:
CTA+IC+HH:Hans Hansen'

COM - Communication contact (C9) — Group 11, Group 10

Function:
A segment to identify a communication number of a person or department to whom communication should be directed.

EDIFACT Segment Definition				Cl	Specification	
C076	COMMUNICATION CONTACT		M	M		
3148	Communication number	an..25	M	M		
3155	Communication channel qualifier	an..3	M	M	EM	Electronic mail
					FX	Telefax
					MA	Mail
					TE	Telephone
					TL	Telex
					XF	X.400

Usage:

Example:
COM+22554210:TE'

Copyright © 1997- Norsk EDIPRO

Group 12 (C99) — Group 10

Function:
A group of segments to identify required documents.

Usage:

Segments used in this group:

		NORD.IG		This IG	
	Segment Group 12	C	9	C	9
DOC	Document/message details	M	1	M	1
DTM	Date/time/period	C	1	C	1

DOC - DOCUMENT/MESSAGE DETAILS (M1) — Group 12, Group 10

Function:
A segment to identify a document required of, by or for the party.

EDIFACT Segment Definition				Cl	Specification	
C002	DOCUMENT/MESSAGE NAME		M	M		
1001	Document/message name, coded	an..3	C	C	Examples:	
					380	Commercial invoice)
					383	Debit note (giro)
					624	Forwarder's certificate of receipt)
					700	Waybill
					706	Bill of lading original
					730	Road consignment note (CMR)
					763	Forwarder's certificate of transport)
					890	Dangerous goods declaration
					954	EUR 1 certificate of origin
					ZBR	ZCD Cash on delivery bank remittance
					ZLB	Labels
					ZCQ	ZCD Cash on delivery cheque
					ZTR	ZCD Cash on delivery tratte
~~1131~~	~~Code list qualifier~~	~~an..3~~	~~C~~	C		
~~3055~~	~~Code list responsible agency, coded~~	~~an..3~~	~~C~~	-	Not used	
~~1000~~	~~Document/message name~~	~~an..35~~	~~C~~	-	Not used	
C503	DOCUMENT/MESSAGE DETAILS		C	C		
1004	Document/message number	an..35	C	C		
1373	Document/message status, coded	an..3	C	C	2	Accompanying goods
					4	To arrive by separate EDI message
					6	To arrive by manual means
					7	To be raised and sent
					19	Document applied for
~~1366~~	~~Document/message source~~	~~an..35~~	~~C~~	-	Not used	
~~3453~~	~~Language, coded~~	~~an..3~~	~~C~~	-	Not used	
~~3153~~	~~COMMUNICATION CHANNEL IDENTIFIER, CODED~~	~~an..3~~	~~C~~	-	Not used	
1220	NUMBER OF COPIES OF DOCUMENT REQUIRED	n..2	C	-		
1218	NUMBER OF ORIGINALS OF DOCUMENT REQUIRED	n..2	C	-	Not used	

Usage:
General All DOC segments should be related to (belong to the segment group headed by) the NAD/CZ segment).

Example:
DOC+706+12345:19'

Copyright © 1997- Norsk EDIPRO

DTM - DATE/TIME/PERIOD (C1) — Group 12, Group 10

Function:
A segment to identify date and time relating to the reference.

EDIFACT Segment Definition				Cl	Specification	
C507	DATE/TIME/PERIOD		M	M		
2005	Date/time/period qualifier	an..3	M	M	137	Document/message date/time
2380	Date/time/period	an..35	C	C		
2379	Date/time/period format qualifier	an..3	C	C	101	YYMMDD
					102	CCYYMMDD
					201	YYMMDDHHMM
					203	CCYYMMDDHHMM

Usage:
General This segment should only be used in order to give the date of a commercial invoice (380).

Example:
DTM+137:940428:101'

Copyright © 1997- Norsk EDIPRO

Group 14 (C99) — Group 10

Function:
A group of segments to specify a reference related to the party.

Usage:

Segments used in this group:

```
                                                    NORD.IG      This IG
-------- Segment Group 14 ------------------------- C     9      C     9 ----------+
  RFF    Reference                                  M     1      M     1 ----------+
```

RFF - Reference (M1) — Group 14, Group 10

Function:
A segment to identify a reference used by a party.

EDIFACT Segment Definition				Cl	Specification	
C506	REFERENCE		M	M		
1153	Reference qualifier	an..3	M	M	ADE	Account number
					IT①	Internal customer number
1154	Reference number	an..35	C	C		
~~1156~~	~~Line number~~	~~an..6~~	~~C~~	-	Not used	
~~4000~~	~~Reference version number~~	~~an..35~~	~~C~~	-	Not used	

Usage:
C506/1153 ①IT: To be used for secondary identification only (primary identification placed in NAD). Use the NAD-segment (and not this RFF-segment) when the internal customer number is the primary identification.

Example:
RFF+IT:6220630'

Copyright © 1997- Norsk EDIPRO

Group 16 (C999)

Function:
A group of segments to describe the goods items for which transport is undertaken.

Usage:

Segments used in this group:

		NORD.IG		This IG	
	Segment Group 16	**C**	**999**	**C**	**999**
GID	**Goods item details**	**M**	**1**	**M**	**1**
HAN	Handling instructions	C	1	-	-
TMP	**Temperature**	**C**	**1**	**C**	**1**
RNG	**Range details**	**C**	**1**	**C**	**1**
LOC	Place/location identification	C	9	-	-
MOA	Monetary amount	C	9	-	-
PIA	**Additional product id**	**C**	**9**	**C**	**9**
FTX	**Free text**	**C**	**9**	**C**	**9**
	Segment Group 17	C	9	-	-
NAD	Name and address	M	1	-	-
DTM	Date/time/period	C	1	-	-
	Segment Group 19	**C**	**99**	**C**	**99**
MEA	**Measurements**	**M**	**1**	**M**	**1**
EQN	Number of units	C	1	-	-
	Segment Group 20	**C**	**99**	**C**	**99**
DIM	**Dimensions**	**M**	**1**	**M**	**1**
EQN	Number of units	C	1	-	-
	Segment Group 21	C	9	-	-
RFF	Reference	M	1	-	-
DTM	Date/time/period	C	9	-	-
	Segment Group 22	**C**	**9**	**C**	**9**
PCI	**Package identification**	**M**	**1**	**M**	**1**
	Segment Group 26	**C**	**999**	**C**	**999**
SGP	**Split goods placement**	**M**	**1**	**M**	**1**
	Segment Group 28	C	99	-	-
TCC	Transport charge/rate calculations	M	1	-	-
PCD	Percentage details	C	1	-	-
MOA	Monetary amount	C	9	-	-
QTY	Quantity	C	9	-	-
	Segment Group 29	**C**	**9**	**C**	**9**
DGS	**Dangerous goods**	**M**	**1**	**M**	**1**
FTX	**Free text**	**C**	**99**	**C**	**99**
	Segment Group 30	C	9	-	-
CTA	Contact information	M	1	-	-
COM	Communication contact	C	9	-	-
	Segment Group 31	**C**	**9**	**C**	**9**
MEA	**Measurements**	**M**	**1**	**M**	**1**
EQN	Number of units	C	1	-	-
	Segment Group 32	C	999	-	-
SGP	Split goods placement	M	1	-	-

Copyright © 1997- Norsk EDIPRO

GID - GOODS ITEM DETAILS (M1) — Group 16

Function:
A segment to identify a goods item for which transport is undertaken. A goods item can be identified by up to three levels of packaging.

EDIFACT Segment Definition				Cl	Specification	
1496	GOODS ITEM NUMBER	n..5	C	C	①	
C213	NUMBER AND TYPE OF PACKAGES		C	C		
7224	Number of packages	n..8	M	M		
7065	Type of packages identification	an..7	C	C	②	
~~1131~~	~~Code list qualifier~~	~~an..3~~	~~C~~	-	Not used	
~~3055~~	~~Code list responsible agency, coded~~	~~an..3~~	~~C~~	-	Not used	
~~7064~~	~~Type of packages~~	~~an..35~~	~~C~~	-	Not used	
~~C213~~	~~NUMBER AND TYPE OF PACKAGES~~	-	~~C~~	-	Not used	
~~7224~~	~~Number of packages~~	~~n..8~~	~~M~~	-	Not used	
~~7065~~	~~Type of packages identification~~	~~an..7~~	~~C~~	-	Not used	
~~1131~~	~~Code list qualifier~~	~~an..3~~	~~C~~	-	Not used	
~~3055~~	~~Code list responsible agency, coded~~	~~an..3~~	~~C~~	-	Not used	
~~7064~~	~~Type of packages~~	~~an..35~~	~~C~~	-	Not used	
~~C213~~	~~NUMBER AND TYPE OF PACKAGES~~	-	~~C~~	-	Not used	
~~7224~~	~~Number of packages~~	~~n..8~~	~~M~~	-	Not used	
~~7065~~	~~Type of packages identification~~	~~an..7~~	~~C~~	-	Not used	
~~1131~~	~~Code list qualifier~~	~~an..3~~	~~C~~	-	Not used	
~~3055~~	~~Code list responsible agency, coded~~	~~an..3~~	~~C~~	-	Not used	
~~7064~~	~~Type of packages~~	~~an..35~~	~~C~~	-	Not used	

Usage:

1496 ①A GID group with data element 1496=99999 can be used to give information related to the whole consignment. Note: The information given here should only be such information that can not be placed in the CNT segment at the upper level of the message.

7065 ②Use the two-letter code in UN/ECE Recommendation no. 21 to identify type of packages and also the following code if you want to specify pallets: ZPA. See appendix A for more information.

Example:
GID+99999+15:ZPA'

TMP - TEMPERATURE (C1) — Group 16

Function:
A segment to specify a temperature setting for a goods item.

EDIFACT Segment Definition				Cl	Specification	
6245	TEMPERATURE QUALIFIER	an..3	M	M	1	Storage temperature
					2	Transport temperature
					3	Cargo operating temperature
C239	TEMPERATURE SETTING		C	C		
6246	Temperature setting	n3	C	C		
6411	Measure unit qualifier	an..3	C	C	CEL	Celsius

Usage:
General This segment should only be used in the GID group where 1496 in the GID segment=99999.

Example:
TMP+2+005:CEL'

RNG - RANGE DETAILS (C1) — Group 16

Function:
A segment to specify a temperature range setting for a goods item.

EDIFACT Segment Definition				Cl	Specification	
6167	RANGE TYPE QUALIFIER	an..3	M	M	1	Allowance range
C280	RANGE		C	C		
6411	Measure unit qualifier	an..3	M	M	CEL	Celsius
6162	Range minimum	n..18	C	C		
6152	Range maximum	n..18	C	C		

Usage:
General This segment should only be used in the GID group where 1496 in the GID segment=99999.

Example:
RNG+1+CEL:0:10'

Copyright © 1997- Norsk EDIPRO

PIA - ADDITIONAL PRODUCT ID (C9)

Group 16

Function:

A segment to specify article numbers.

EDIFACT Segment Definition				Cl	Specification	
4347	PRODUCT ID FUNCTION QUALIFIER	an..3	M	M	5	Product identification
C212	ITEM NUMBER IDENTIFICATION		M	M		
7140	Item number	an..35	C	C		
7143	Item number type, coded	an..3	C	C	EN	International Article Numbering Association (EAN)
					HS	Harmonised system
					VN①	Vendor item number
					ZPI	*Product identification (mutually agreed)*
					ZTG	Category for insurance (*Consult forwarder for insurance category*~~Tollpost-Globe specific code value~~)
~~1131~~	~~Code list qualifier~~	~~an..3~~	~~C~~	-	Not used	
3055	Code list responsible agency, coded	an..3	C	C		
~~C212~~	~~ITEM NUMBER IDENTIFICATION~~	-	~~C~~	-	Not used	
~~7140~~	~~Item number~~	~~an..35~~	~~C~~	-	Not used	
~~7143~~	~~Item number type, coded~~	~~an..3~~	~~C~~	-	Not used	
~~1131~~	~~Code list qualifier~~	~~an..3~~	~~C~~	-	Not used	
~~3055~~	~~Code list responsible agency, coded~~	~~an..3~~	~~C~~	-	Not used	
~~C212~~	~~ITEM NUMBER IDENTIFICATION~~	-	~~C~~	-	Not used	
~~7140~~	~~Item number~~	~~an..35~~	~~C~~	-	Not used	
~~7143~~	~~Item number type, coded~~	~~an..3~~	~~C~~	-	Not used	
~~1131~~	~~Code list qualifier~~	~~an..3~~	~~C~~	-	Not used	
~~3055~~	~~Code list responsible agency, coded~~	~~an..3~~	~~C~~	-	Not used	
~~C212~~	~~ITEM NUMBER IDENTIFICATION~~	-	~~C~~	-	Not used	
~~7140~~	~~Item number~~	~~an..35~~	~~C~~	-	Not used	
~~7143~~	~~Item number type, coded~~	~~an..3~~	~~C~~	-	Not used	
~~1131~~	~~Code list qualifier~~	~~an..3~~	~~C~~	-	Not used	
~~3055~~	~~Code list responsible agency, coded~~	~~an..3~~	~~C~~	-	Not used	
~~C212~~	~~ITEM NUMBER IDENTIFICATION~~	-	~~C~~	-	Not used	
~~7140~~	~~Item number~~	~~an..35~~	~~C~~	-	Not used	
~~7143~~	~~Item number type, coded~~	~~an..3~~	~~C~~	-	Not used	
~~1131~~	~~Code list qualifier~~	~~an..3~~	~~C~~	-	Not used	
~~3055~~	~~Code list responsible agency, coded~~	~~an..3~~	~~C~~	-	Not used	

Usage:

C212/7143 ①VN-To be used if a quotation exists whereby the transport cost is to be calculated based on the number of units (pairs, etc.) of a specific unit type. The unit type code is to be given in data element 7140. The actual number of units is then to be placed in the MEA segment.

Example:

PIA+5+123:VN'

FTX - FREE TEXT (C9)

Group 16

Function:

A segment to specify processable supplementary information relating to the goods item.

EDIFACT Segment Definition				Cl	Specification	
4451	TEXT SUBJECT QUALIFIER	an..3	M	M	AAA	Goods description
~~4453~~	~~TEXT FUNCTION, CODED~~	~~an..3~~	~~C~~	-	Not used	
~~C107~~	~~TEXT REFERENCE~~	-	~~C~~	-	Not used	
~~4441~~	~~Free text, coded~~	~~an..3~~	~~M~~	-	Not used	
~~1131~~	~~Code list qualifier~~	~~an..3~~	~~C~~	-	Not used	
~~3055~~	~~Code list responsible agency, coded~~	~~an..3~~	~~C~~	-	Not used	
C108	TEXT LITERAL		C	C		
4440	Free text	an..70	M	M		
4440	Free text	an..70	C	C		
4440	Free text	an..70	C	C		
4440	Free text	an..70	C	C		
4440	Free text	an..70	C	C		
3453	LANGUAGE, CODED	an..3	C	C		

Usage:

General To be used for goods description - either on goods item level or on consignment level (1496=99999).

Example:

FTX+AAA+++Textiles'

Copyright © 1997- Norsk EDIPRO

Group 19 (C999) — Group 16

Function:
A group of segments to specify measurements applicable to a goods item.

Usage:

Segments used in this group:

```
                                                   NORD.IG      This IG
-------- Segment Group 19 ------------------------- C    99     C    99 ----------+
  MEA    Measurements                               M     1     M     1           |
  EQN    Number of units                            C     1     -     - ----------+
```

MEA - Measurements (M1) — Group 19, Group 16

Function:
A segment to specify measurements, other than dimensions, applicable to a goods item.

EDIFACT Segment Definition				Cl	Specification	
6311	MEASUREMENT APPLICATION QUALIFIER	an..3	M	M	CT	Counts
					WT	Weights
					VOL	Volume
C502	MEASUREMENT DETAILS		C	C		
6313	Measurement dimension, coded	an..3	C	C	G	Gross weight
					N	Actual net weight
~~6321~~	~~Measurement significance, coded~~	~~an..3~~	~~C~~	-	Not used	
~~6155~~	~~Measurement attribute, coded~~	~~an..3~~	~~C~~	-	Not used	
C174	VALUE/RANGE		C	C		
6411	Measure unit qualifier	an..3	M	M	DMK	Square decimetre
					DMQ	Cubic decimetre
					GRM	Gram
					KGM	Kilogram
					MTK	Square metre
					MTQ	Cubic metre
					MTR	Metre
					PCE	Pieces
6314	Measurement value	n..18	C	C		
~~6162~~	~~Range minimum~~	~~n..18~~	~~C~~	-	Not used	
~~6152~~	~~Range maximum~~	~~n..18~~	~~C~~	-	Not used	
~~7383~~	~~SURFACE/LAYER INDICATOR, CODED~~	~~an..3~~	~~C~~	-	Not used	

Usage:

Example:
MEA+WT+G+KGM:5768' - Gross weight
MEA+WT+N+KGM:3974' - Net weight

Copyright © 1997- Norsk EDIPRO

Group 20 (C999) — Group 16

Function:
A group of segments to specify dimensions applicable to a goods item.

Usage:

Segments used in this group:

		NORD.IG		This IG	
	Segment Group 20	**C**	**99**	**C**	**99**
DIM	**Dimensions**	**M**	**1**	**M**	**1**
EQN	Number of units	C	1	-	-

DIM - Dimensions (M1) — Group 20, Group 16

Function:
To specify dimensions applicable to a goods item.

EDIFACT Segment Definition				Cl	Specification	
6145	DIMENSION QUALIFIER	an..3	M	M	2	Package dimensions (incl. goods)
					9	Off-standard dimension general
C211	DIMENSIONS		M	M		
6411	Measure unit qualifier	an..3	M	M	MTR	Metre
					DTM	Decimetre
					CMT	Centimetre
6168	Length dimension	n..15	C	C		
6140	Width dimension	n..15	C	C		
6008	Height dimension	n..15	C	C		

Usage:

Example:
DIM+2+CMT:20:30:40'

Copyright © 1997- Norsk EDIPRO

Group 22 (C999) — Group 16

Function:
A group of segments to specify marks and numbers of a goods item.

Usage:

Segments used in this group:

		NORD.IG		This IG	
	Segment Group 22	C	9	C	9
PCI	Package identification	M	1	M	1

PCI - Package identification (M1) — Group 22, Group 16

Function:
A segment to specify marks and numbers of a goods item.

EDIFACT Segment Definition				Cl	Specification	
4233	MARKING INSTRUCTIONS, CODED	an..3	C	C	17①	Seller's instructions
					18②	Carrier's instructions
					24③	Shipper assigned
C210	MARKS & LABELS		C	C		
7102	Shipping marks	an..35	M	M		
7102	Shipping marks	an..35	C	C		
7102	Shipping marks	an..35	C	C		
7102	Shipping marks	an..35	C	C		
7102	Shipping marks	an..35	C	C		
7102	Shipping marks	an..35	C	C		
7102	Shipping marks	an..35	C	C		
7102	Shipping marks	an..35	C	C		
7102	Shipping marks	an..35	C	C		
7102	Shipping marks	an..35	C	C		
~~8275~~	~~CONTAINER/PACKAGE STATUS, CODED~~	~~an..3~~	~~C~~	-	Not used	

Usage:

General — Bar-code information can be given on consignment level (GID 1496=99999), or on goods item level if information on that level is in the message. E.g. dangerous goods of different types.

4233 — *①17: Bar coded ID according to consignor's standard*
②18: One package id in each 7102. Bar coded ID according to carriers standard.
③24: *General*~~The~~ *goods* marking *(identification) using* ~~relates generally to the goods item as such (for~~ free text~~)~~ *letters, not bar codes.*

Example:
PCI+18+001765432180015004'
PCI+18+001765432180025004'

Copyright © 1997- Norsk EDIPRO

Group 26 (C999) — Group 16

Function:
A group of segments to specify the distribution of a goods item among the transport equipment.

Usage:

Segments used in this group:

```
                                                    NORD.IG      This IG
-------- Segment Group 26 ------------------------- C   999     C   999 ----------+
  SGP    Split goods placement                      M     1     M     1 ----------+
```

SGP - SPLIT GOODS PLACEMENT (M1) — Group 26, Group 16

Function:
A segment to identify the equipment in which goods are transported.

EDIFACT Segment Definition				Cl	Specification
C237	EQUIPMENT IDENTIFICATION		M	M	
	Equipment identification number	an..17	C	C	
~~1131~~	~~Code list qualifier~~	~~an..3~~	~~C~~	-	Not used
~~3055~~	~~Code list responsible agency, coded~~	~~an..3~~	~~C~~	-	Not used
7224	NUMBER OF PACKAGES	n..8	C	C	

Usage:
To be used if a consigment is to be split into several transportation units at loading point.

Example:
SGP+TG2640+2'

Copyright © 1997- Norsk EDIPRO

Group 29 (C999) — Group 16

Function:
A group of segments to specify dangerous goods details related to the goods item. One goods item may be in different dangerous goods classes.

Usage:

Segments used in this group:

		NORD.IG		This IG	
	Segment Group 29	**C**	**9**	**C**	**9**
DGS	**Dangerous goods**	**M**	**1**	**M**	**1**
FTX	**Free text**	**C**	**99**	**C**	**99**
	Segment Group 30	C	9	-	-
CTA	Contact information	M	1	-	-
COM	Communication contact	C	9	-	-
	Segment Group 31	**C**	**9**	**C**	**9**
MEA	**Measurements**	**M**	**1**	**M**	**1**
EQN	Number of units	C	1	-	-
	Segment Group 32	C	999	-	-
SGP	Split goods placement	M	1	-	-

DGS - DANGEROUS GOODS (M1) — Group 29, Group 16

Function:
A segment to indicate the class of dangerous goods, packing group, etc.

EDIFACT Segment Definition				Cl	Specification	
8273	DANGEROUS GOODS REGULATIONS, CODED	an..3	C	C	ADR	European agreement regarding the total carriage of dangerous goods
					IMD	IMO IMDG code
					RID	Rail/road dangerous goods book
C205	HAZARD CODE		C	C		
8351	Hazard code identification	an..7	M	M		
8078	Hazard substance/item/page number	an..7	C	C		
8092	Hazard code version number	an..10	C	C		
C234	UNDG INFORMATION		C	C		
7124	Undg number	n4	C	C		
7088	Dangerous goods flashpoint	an..8	C	C		
C223	DANGEROUS GOODS SHIPMENT FLASHPOINT		C	C		
7106	Shipment flashpoint	n3	C	C		
6411	Measure unit qualifier	an..3	C	C		
8339	PACKING GROUP, CODED	an..3	C	C		
8364	EMS NUMBER	an..6	C	C		
8410	MFAG	an..4	C	C		
8126	TREM CARD NUMBER	an..10	C	C		
C235	HAZARD IDENTIFICATION		C	C		
8158	Hazard identification number, upper part	an..4	C	C		
8186	Substance identification number, lower part	an4	C	C		
~~C236~~	~~DANGEROUS GOODS LABEL~~	-	~~C~~	-	Not used	
~~8246~~	~~Dangerous goods label marking~~	~~an..4~~	~~C~~	-	Not used	
~~8246~~	~~Dangerous goods label marking~~	~~an..4~~	~~C~~	-	Not used	
~~8246~~	~~Dangerous goods label marking~~	~~an..4~~	~~C~~	-	Not used	
~~8255~~	~~PACKING INSTRUCTION, CODED~~	~~an..3~~	~~C~~	-	Not used	
~~8325~~	~~CATEGORY OF MEANS OF TRANSPORT, CODED~~	~~an..3~~	~~C~~	-	Not used	
~~8211~~	~~PERMISSION FOR TRANSPORT, CODED~~	~~an..3~~	~~C~~	-	Not used	

Usage:
General — Can be used on consignment level (GID 1496=99999) if we have uniformly dangerous goods in the consignment - otherwise the segment should be applied on goods item level.

Example:
DGS+ADR+1.2:42(b)+9837:70'

Copyright © 1997- Norsk EDIPRO

FTX - FREE TEXT (C99) — Group 29, Group 16

Function:
A segment to specify the dangerous goods technical name and to specify any additional dangerous goods information.

EDIFACT Segment Definition				Cl	Specification	
4451	TEXT SUBJECT QUALIFIER	an..3	M	M	AAC	Dangerous goods additional information
					AAD	Dangerous goods, technical name
~~4453~~	~~TEXT FUNCTION, CODED~~	~~an..3~~	~~C~~	-	Not used	
~~C107~~	~~TEXT REFERENCE~~	-	~~C~~	-	Not used	
~~4441~~	~~Free text, coded~~	~~an..3~~	~~M~~	-	Not used	
~~1131~~	~~Code list qualifier~~	~~an..3~~	~~C~~	-	Not used	
~~3055~~	~~Code list responsible agency, coded~~	~~an..3~~	~~C~~	-	Not used	
C108	TEXT LITERAL		C	C		
4440	Free text	an..70	M	M		
4440	Free text	an..70	C	C		
4440	Free text	an..70	C	C		
4440	Free text	an..70	C	C		
4440	Free text	an..70	C	C		
~~3453~~	~~LANGUAGE, CODED~~	~~an..3~~	~~C~~	-	Not used	

Usage:

Example:
FTX+AAD+++Løsning av natrium hydroxyd'

Copyright © 1997- Norsk EDIPRO

Group 31 (C999) — Group 29, Group 16

Function:
A group of segments to identify dangerous goods measurements.

Usage:

Segments used in this group:

		NORD.IG		This IG	
	Segment Group 31	**C**	**9**	**C**	**9**
MEA	**Measurements**	**M**	**1**	**M**	**1**
EQN	Number of units	C	1	-	-

MEA - MEASUREMENTS (M1) — Group 31, Group 29, Group 16

Function:
A segment to specify measurements of the dangerous goods.

EDIFACT Segment Definition				Cl	Specification	
6311	MEASUREMENT APPLICATION QUALIFIER	an..3	M	M	WT	Weights
C502	MEASUREMENT DETAILS		C	C		
6313	Measurement dimension, coded	an..3	C	C	N	Actual net weight
~~6321~~	~~Measurement significance, coded~~	~~an..3~~	~~C~~	-	Not used	
~~6155~~	~~Measurement attribute, coded~~	~~an..3~~	~~C~~	-	Not used	
C174	VALUE/RANGE		C	C		
6411	Measure unit qualifier	an..3	M	M	KGM	Kilogram
6314	Measurement value	n..18	C	C		
~~6162~~	~~Range minimum~~	~~n..18~~	~~C~~	-	Not used	
~~6152~~	~~Range maximum~~	~~n..18~~	~~C~~	-	Not used	
~~7383~~	~~SURFACE/LAYER INDICATOR, CODED~~	~~an..3~~	~~C~~	-	Not used	

Usage:
General — To be used to give the net weight of explosives when C703 NATURE OF CARGO in the TSR segment (7085)=REX (explosives).

Example:
MEA+WT+N+KGM:0,05'

Copyright © 1997- Norsk EDIPRO

Group 34 (C999)

Function:
A group of segments to specify equipment in which goods are transported.

Usage:

Segments used in this group:

		NORD.IG		This IG	
	Segment Group 34	**C**	**999**	**C**	**999**
EQD	**Equipment details**	**M**	**1**	**M**	**1**
EQN	**Number of units**	**C**	**1**	**C**	**1**
TMD	Transport movement details	C	1	-	-
MEA	Measurements	C	9	-	-
DIM	Dimensions	C	9	-	-
SEL	Seal number	C	99	-	-
FTX	Free text	C	9	-	-
	Segment Group 36	C	9	-	-
NAD	Name and address	M	1	-	-
	Segment Group 37	C	99	-	-
EQA	Attached equipment	M	1	-	-
EQN	Number of units	C	1	-	-

EQD - EQUIPMENT DETAILS (M1) — Group 34

Function:
A segment to specify equipment, and equipment size and type used in the transport.

EDIFACT Segment Definition				Cl	Specification
8053	EQUIPMENT QUALIFIER	an..3	M	M	Examples: CN Container EFP Exchangeable EUR flat pallet PA Pallet RR Rail car
C237	EQUIPMENT IDENTIFICATION		C	C	
8260	Equipment identification number	an..17	C	C	①
~~1131~~	~~Code list qualifier~~	~~an..3~~	~~C~~	-	Not used
3055	Code list responsible agency, coded	an..3	C	C	87 Assigned by carrier
~~C224~~	~~EQUIPMENT SIZE AND TYPE~~	-	~~C~~	-	Not used
~~8155~~	~~Equipment size and type identification~~	~~an..4~~	~~C~~	-	Not used
~~1131~~	~~Code list qualifier~~	~~an..3~~	~~C~~	-	Not used
~~3055~~	~~Code list responsible agency, coded~~	~~an..3~~	~~C~~	-	Not used
~~8154~~	~~Equipment size and type~~	~~an..35~~	~~C~~	-	Not used
~~8077~~	~~EQUIPMENT SUPPLIER, CODED~~	~~an..3~~	~~C~~	-	Not used
~~8249~~	~~EQUIPMENT STATUS, CODED~~	~~an..3~~	~~C~~	-	Not used
~~8169~~	~~FULL/EMPTY INDICATOR, CODED~~	~~an..3~~	~~C~~	-	Not used

Usage:
8260 ①Container number.

Example:
EQD+CN+1234::87'

Copyright © 1997- Norsk EDIPRO

EQN - NUMBER OF UNITS (C1) — Group 34

Function:
A segment to specify number of pieces of equipment required.

EDIFACT Segment Definition				Cl	Specification	
C523	NUMBER OF UNIT DETAILS		M	M		
6350	Number of units	n..15	C	C		
~~6353~~	~~Number of units qualifier~~	~~an..3~~	~~C~~	-	Not used	

Usage:
General Used to indicate the number of pieces of equipment required.

Example:
EQN+80'

SEL - SEAL NUMBER (C99) — Group 34

Function:
A segment to identify seal and seal issuer associated with the equipment.

EDIFACT Segment Definition				Cl	Specification	
9308	SEAL NUMBER	an..10	M	M		
C215	SEAL ISSUER		C	C		
9303	Sealing party, coded	an..3	C	C	CA	Carrier
					CU	Customs
					SH	Shipper
					TO	Terminal operator
1131	Code list qualifier	an..3	C	C		
3055	Code list responsible agency, coded	an..3	C	C		
9302	Sealing party	an..17	C	C		

Usage:

Example:

Copyright © 1997- Norsk EDIPRO

UNT - MESSAGE TRAILER (M1)

Function:
A service segment ending a message, giving the total number of segments in the message and the control reference number of the message.

EDIFACT Segment Definition				Cl	Specification
0074 NUMBER OF SEGMENTS IN A MESSAGE	n..6	M		M	
0062 MESSAGE REFERENCE NUMBER	an..14	M		M	

Usage:

Example:
UNT+39+MSGID001'

Copyright © 1997- Norsk EDIPRO

8 EXAMPLES

Example #1:

(nasjonal sending)

```
UNH+MSGID001+IFTMIN:S:93A+UN+NOSM12'
BGM+700+DOCID001+9'
DTM+137:19960824:102'
TSR+9+ZPD'
TSR+ZIN'
TSR+ZAD'
MOA+157:50000:NOK'
MOA+50:50000:NOK'
FTX+ICN+++HØY LASTERAMPE HOS MOTTAKER'
FTX+SIC+++RESTORDRE 233 SENDES 4/9/96'
CNT+7:300:KGM'
CNT+11:4:PCE'
RFF+CU:ORDRENR 112233'
RFF+CT:AVT123456'
CPI+1++P'
TDT+20++3+++123456789::82'
LOC+80+0516:16'
NAD+CZ+112233445:87'
DOC+383+:2'
DOC+383+:19'
NAP+CN+987654321-004:82'
GID+99999+4:ZPA'
FTX+AAA+++BILDERAMMER'
PCI+18+00176543210017060:00176543210027060:00176543210037060:00176543210047060'
EQD+EFP'
EQN+4'
UNT+27+MSGID001'
```

Copyright © 1997- Norsk EDIPRO

Example #2:

(internasjonal sending)

```
UNH+MSGID002+IFTMIN:S:93A+UN+NOSM01'
BGM+340+DOCID002+9'
DTM+137:19960830:102'
DTM+2:19960901:102'
TSR+ZCD'
TSR+ZDG'
MOA+22:120000:SEK'
CNT+7:700:KGM'
CNT+11:1:PCE'
TOD+5+021:ZCT'
RFF+CU:ORDRENR 323211'
RFF+CO:BESTNR 3212'
RFF+CT:AVT888866'
CPI+1++C'
TDT+20++3+++123456789::82'
LOC+80+0516:16'
LOC+80+NO:162'
NAD+CZ+112233445:87'
NAD+PW+++Fabrikkhjørnet+Jernbaneveien+BERGEN++0530+NO'
NAD+FW+++Norden Transport+Industriveien 14+OSLO++0510+NO'
NAP+CN+++Hansen & Jensen+Strandgatan+HELSINGBORG++25110+SE'
NAP+DP+++Hansen & Jensen+Storgatan+JØNKØPING++37500+SE'
GID+1+1:CX'
MEA+WT+G+KGM:700'
PCI+18+00176543220010000'
DGS+ADR+8:42(b)'
FTX+AAD+++LØSNING AV NATRIUMHYDROKSYD'
EQD+EFP'
EQN+1'
UNT+30+MSGID002'
```

Copyright © 1997- Norsk EDIPRO

Example #3:

```
UNH+1+IFTMIN:S:93A:UN:NOSM10'
BGM+700+CC106012747NO+9'
DTM+137:199502200930:203'
TSR+7++3'
TSR+ZCD'
MOA+22:275:NOK'
FTX+ICN+++Bok'
CNT+7:0.525:KGM'
TOD++5++023:ZCT'
RFF+BT:57'
RFF+CO:1234'
RFF+CU:1256'
TDT+20++3'
LOC+5+1481:16'
NAD+CZ+948363::87'
NAD+CN+++Hansen & Jensen+Yttersvingen 1:Postboks 355+HAGAN++1481'
CTA+IC+:Beate Hansen'
COM+54752777:TE'
RFF+ADE:08021234567'
GID+99999'
DIM+2+MTR:0.35:0.22:0.06'
UNT+23+1'
```

Copyright © 1997- Norsk EDIPRO

APPENDIX A

7065 Type of packages identification

Use the two-letter codes in UN/ECE Recommendation no. 21 to identify type of packages:

Name	Code
Aerosol	AE
Ampoule, non-protected	AM
Ampoule, protected	AP
Atomizer	AT
Bag	BG
Bale, compressed	BL
Bale, non-compressed	BN
Balloon, non-protected	BF
Balloon, protected	BP
Bar	BR
Barrel	BA
Bars, in bundle/bunch/truss	BZ
Basket	BK
Beer crate	CB
Bin	BI
Board	BD
Board, in bundle/bunch/truss	BY
Bobbin	BB
Bolt	BT
Bottle, non-protected, cylindrica	BO
Bottle, non-protected, bulbous	BS
Bottle, protected cylindrical	BQ
Bottle, protected bulbous	BV
Bottlecrate, bottlerack	BC
Box	BX
Bucket	BJ
Bulk, liquefied gas at abnormal temperature/pressure	VQ
Bulk, gas at 1031 mbar and 15/C	VG
Bulk, liquid	VL
Bulk, solid, fine particles "powders"	VY
Bulk, solid, granular particles "grains"	VR
Bulk, solid, large particles "nodules"	VO
Bunch	BH
Bundle	BE
Butt	BU
Cage	CG
Can, rectangular	CA
Can, cylindrical	CX
Canister	CI
Canvas	CZ
Carboy, non-protected	CO
Carboy, protected	CP
Carton	CT
Case	CS

Copyright © 1997- Norsk EDIPRO

Cask	CK
Chest	CH
Churn	CC
Coffer	CF
Coffin	CJ
Coil	CL
Collapsible tube	TD
Cover	CV
Crate	CR
Creel	CE
Cup	CU
Cylinder	CY
Demijohn, non-protected	DJ
Demijohn, protected	DP
Drum	DR
Envelope	EN
Filmpack	FP
Firkin	FI
Flask	FL
Footlocker	FO
Frame	FR
Framed crate	FD
Fruit crate	FC
Gas bottle	GB
Girder	GI
Girders, in bundle/bunch/truss	GZ
Hamper	HR
Hogshead	HG
Ingot	IN
Ingots, in bundle/bunch/truss	IZ
Jar	JR
Jerrican, rectangular	JC
Jerrican, cylindrical	JY
Jug	JG
Jutebag	JT
Keg	KG
Log	LG
Logs, in bundle/bunch/truss	LZ
Milk crate	MC
Multiply bag	MB
Multiwall sack	MS
Mat	MT
Match box	MX
Nest	NS
Net	NT
Package	PK
Packet	PA
Pail	PL
Parcel	PC
Pipe	PI
Pipes, in bundle/bunch/truss	PZ

Copyright © 1997- Norsk EDIPRO

Pitcher	PH
Plank	PN
Planks, in bundle/bunch/truss	PZ
Plate	PG
Plates, in bundle/bunch/truss	PY
Pot	PT
Pouch	PO
Rednet	RT
Reel	RL
Ring	RG
Rod	RD
Rods, in bundle/bunch/truss	RZ
Roll	RO
Sachet	SH
Sack	SA
Sea-chest	SE
Shallow crate	SC
Sheet	ST
Sheetmetal	SM
Sheets, in bundle/bunch/truss	SZ
Shrinkwrapped	SW
Skeleton case	SK
Slipsheet	SL
Spindle	SD
Suitcase	SU
Tank, rectangular	TK
Tank, cylindrical	TY
Tea-chest	TC
Tin	TN
Tray	PU
Tray pack	PU
Trunk	TR
Truss	TS
Tub	TB
Tube	TU
Tube, collapsible	TD
Tubes, in bundle/bunch/truss	TZ
Tun	TO
Unpacked or unpackaged	NE
Vacuumpacked	VP
Vat	VA
Vial	VI
Wickerbottle	WB

Copyright © 1997- Norsk EDIPRO